TECHNICAL DATA

Three Phase Electric Motors - Aluminum Frame
UM2A 63M2-4
0.18 kW / 0.25 Cv
1350 RPM

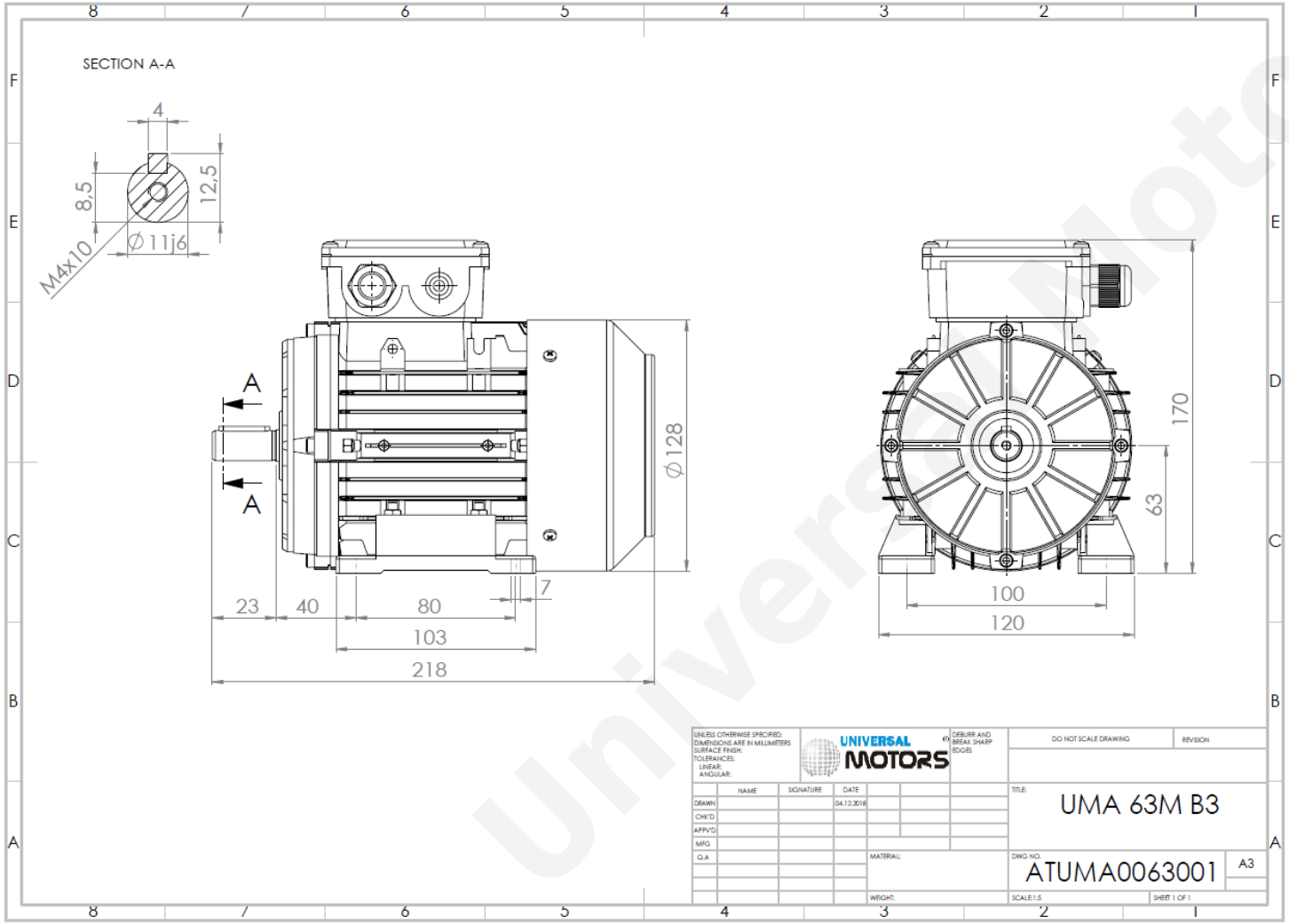

Motor type:	**UM2A 63M2-4**
Output:	**0.18 kW / 0.25 Cv**
Speed (min^{-1}):	**1350 RPM**
Frequency:	**50 Hz**
Voltage:	**400 V**
Current:	**0.55 A**
Power factor (Cos Ø):	**0.73**
Poles:	**4**
Insulation class:	**F**
Temperature rise Class:	**B**
Efficiency 50%:	**60.3 %**
Efficiency 75%:	**64.9 %**
Efficiency 100%:	**64.7 %**
Torque:	**1.25 N.m**
Tstarting/Tnominal:	**2.0**
Istarting/Inominal:	**3.6**
Tmaximum/Tnominal:	**2.1**
Noise:	**52 Db(A)**
Weight:	**4.0 Kg**
Bearing DE:	**6201 2Z**
Bearing NDE:	**6201 2Z**

Regime - S1 **Altitude - 1000m** **Environment Temperature - 40ºC**

* References applied only in the UK

CONTACTS:

UNIVERSAL MOTORS
Rua de São Brás,745
4480-782 VILA DO CONDE

Tel: +351 252 299 080
Fax: +351 252 299 089
Mail: geral@universalmotors.pt

Universal Motors